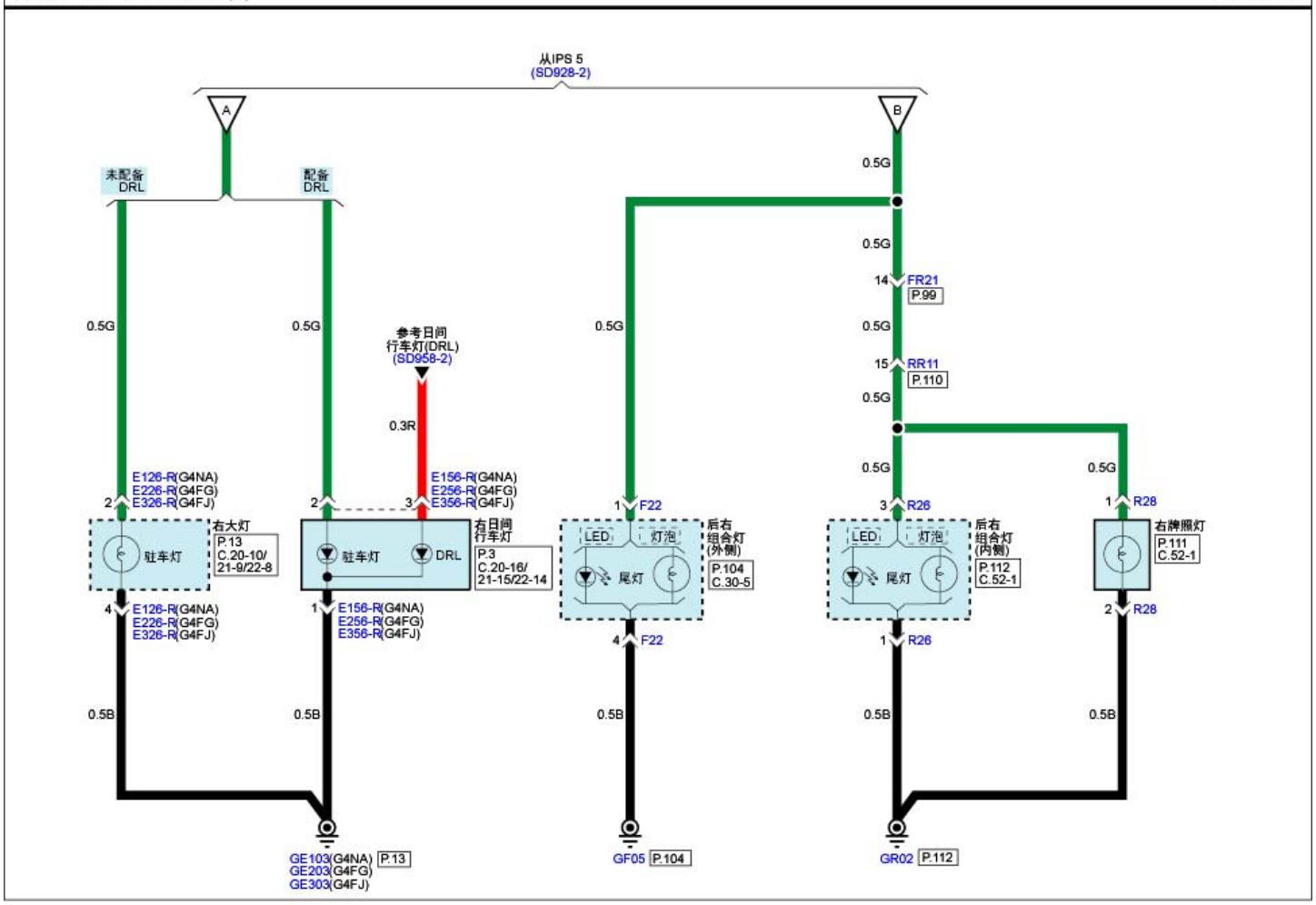尾灯、驻车灯&牌照灯(3) SD928-3